CASE FINISH	CURRENT (AMPS)	WORKING VOLTAGE				MAXIMUM DC RESISTANCE (OHMS)	MAXIMUM VOLTAGE DROP		MINIMUM CAPACITANCE (uF)	MIN. INSERTION LOSS PER MIL-STD-220, FULL LOAD, +25°C												
		-55°C TO +85°C		-55°C TO +125°C																		
		AC	DC	AC	DC		DC	AC		14 KHz	30 KHz	50 KHz	75 KHz	100 KHz	150 KHz	300 KHz	500 KHz	1 MHz	10 MHz	100 MHz	1 GHz	10 GHz
SOLDER	15	125(400Hz)	200	125(400Hz)	150	0.005	---	---	---	--	--	--	--	--	--	12	--	20	41	--	65	--

PART MARKING:

SCI
9920-100-6002 (FAIRVIEW)
9920-100-6002 (MEXICO)
DATE CODE

04

PACKAGE MARKING:

STANDARD

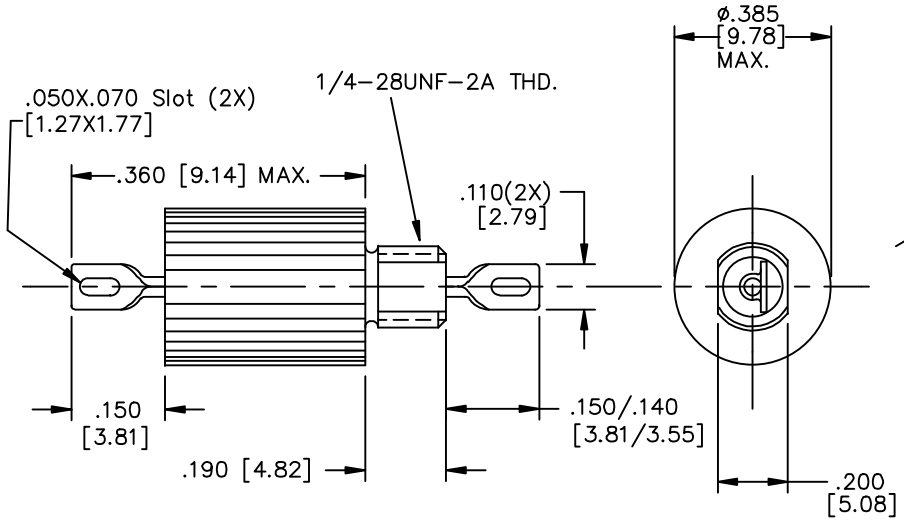

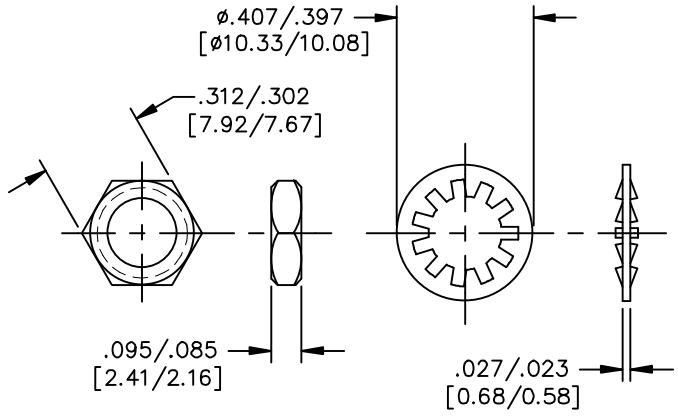

MTG. HARDWARE

MARKING NOTES:

N/A

SCHEMATIC

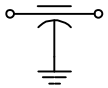

NOTES:

04

1) MOUNTING TORQUE NOT TO EXCEED 7in-lbs.
2) BUBBLE PACK.

REV. NO.	CHANGE NOTICE
4	CN 50696-ENG
3	CN. 183690

UNLESS OTHERWISE SPECIFIED DIMENSIONS ARE IN INCHES. [MILLIMETERS]

DO NOT SCALE.

TOLERANCES UNLESS OTHERWISE SPECIFIED
Fractions ±
Dec. .xx ±
Dec. .xxx ± .010
Angles ±0° 30'

CODE IDENT. NO. OLSP2

SPECTRUM CONTROL INC.

FAIRVIEW PENNSYLVANIA

Dwn. MAYNARD
DATE 9-9-09
Engr. B. DEVINE
Sheet 1 of 1

Description Low Pass EMI Filter

9920-100-6002

Quality Products From The Specialists In Electro-Magnetic Compatibility