CASE FINISH	CURRENT (AMPS)	WORKING VOLTAGE				MAXIMUM DC RESISTANCE (OHMS)	MAXIMUM VOLTAGE DROP		MINIMUM CAPACITANCE (uF)	MIN. INSERTION LOSS PER MIL-STD-220, FULL LOAD, +25°C												
		-55°C TO +85°C		-55°C TO +125°C																		
		AC	DC	AC	DC		DC	AC		30 KHz	100 KHz	150 KHz	200 KHz	300 KHz	500 KHz	1 MHz	2 MHz	5 MHz	10 MHz	100 MHz	1 GHz	10 GHz
SOLDER	15	–	80	–	50	0.005	0.075	–	1.4	15	--	28	--	34	--	44	--	--	60	--	70	70

PART MARKING:

M15733/38-0002
L OLSP2 DATE CODE

PACKAGE MARKING:

M15733/38-0002
OLSP2 DATE CODE
L 50VDC 15A 125°C
51-343-028
PURCH. ORDER
QTY.

MARKING NOTES:

N/A

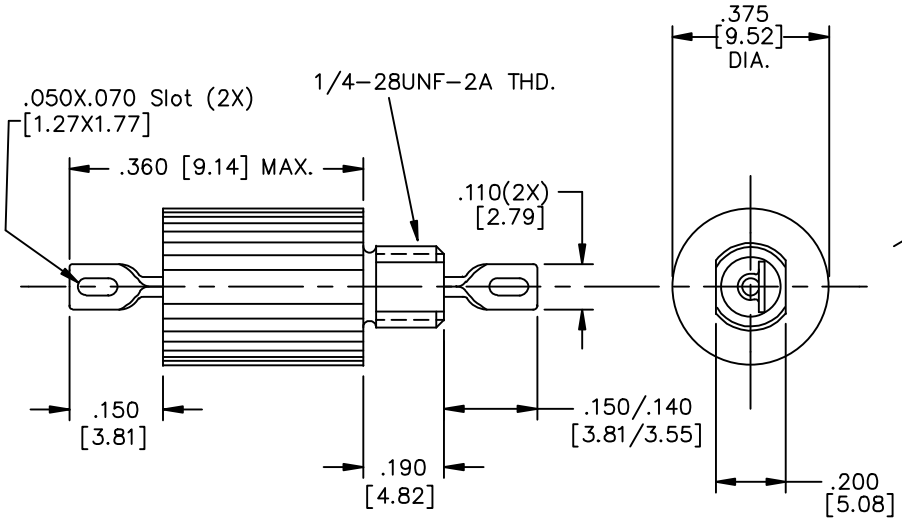

SCHEMATIC

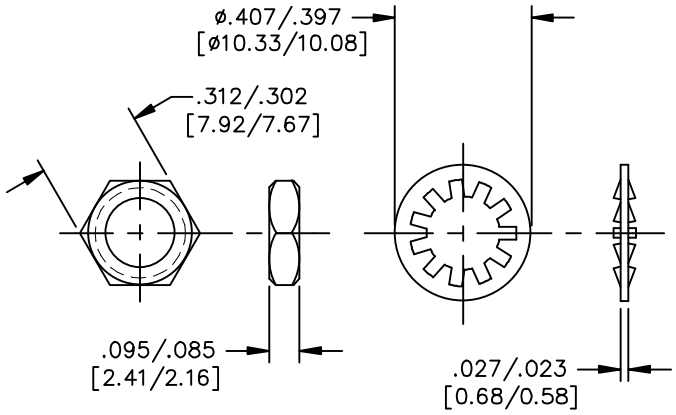

MTG. HARDWARE

46 THIS PART IS CODED "NCA". SPECTRUM CONTROL, INC. DOES NOT HAVE CHANGE AUTHORITY. CUSTOMER APPROVAL REQUIRED BEFORE PRODUCT/PROCESS CHANGES CAN BE MADE.

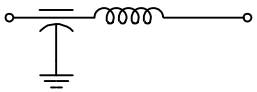

NOTES:

1) MOUNTING TORQUE NOT TO EXCEED 7in-lbs.

REV. NO.	CHANGE NOTICE
46	CN 59046-ENG
45	CN 45132-ENG
44	CN. 180291
43	CN. 177805

UNLESS OTHERWISE SPECIFIED DIMENSIONS ARE IN INCHES [MILLIMETERS]

DO NOT SCALE

THIRD ANGLE PROJECTION

TOLERANCES UNLESS OTHERWISE SPECIFIED
Fractions±
Dec. .xx±
Dec. .xxx± .010
Angles ±0° 30'

CODE IDENT. NO. OLSP2

SPECTRUM CONTROL INC.

FAIRVIEW PENNSYLVANIA

Dwn. KAUFFMAN
Ckd. 11-7-08
Apvd.
Sheet 1 of 1

Description Low Pass EMI Filter

51-343-028

Quality Products From The Specialists In Electro-Magnetic Compatibility